Technical data sheet

MXV EI 80-4804/D

Three-phase motor 11 kW - Round flange - AISI 304/GJL

Item number	I50450421L00
Hydraulic base model	80-4804/D
Motor type	Three-phase motor
Material	AISI 304 / cast iron GJL 250 (wetted parts)
Flange type	Round flange
Integrated variable frequency drive	Yes
Voltage	400V3AC
Scope of supply	Pump, three-phase motor, I-MAT and sensor
Self-priming	No
Liquid temperature (max.)	110 °C
Pumped liquid	Clean, non-abrasive liquids
Frequency	50 Hz
Duty type	S1 (continuous duty)
Protection class	IP55
Power	11.0 kW
Flow rate	1000 l/min
Head (max.)	81 m
Suction connection	DN 80
Discharge connection	DN 80
Net weight	169 kg

Check flow and head together at the duty point; their maximum values do not occur simultaneously. For clean, non-explosive liquids without abrasive solids or long fibres. Materials, seals, connections and operating limits must suit the liquid and installation.

Install and operate according to the relevant instructions. This data sheet does not replace the operating manual.

MXV EI 80-4804/D - Hydraulic performance data

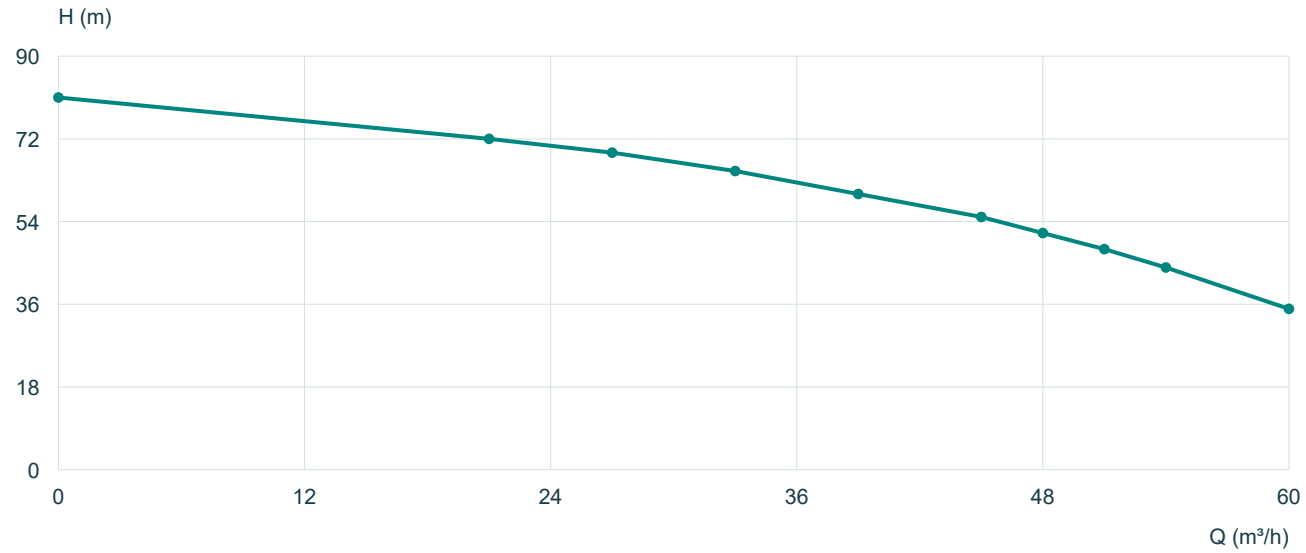

Q m³/h	0	21	27	33	39	45	48	51	54	60
H m	81	72	69	65	60	55	51.5	48	44	35

Tabulated values at approx. 2900 min-1, 50 Hz. Lines connect the published points linearly; no extrapolation. The shut-off point Q = 0 is not an approved continuous operating point.

Dimensions (mm)

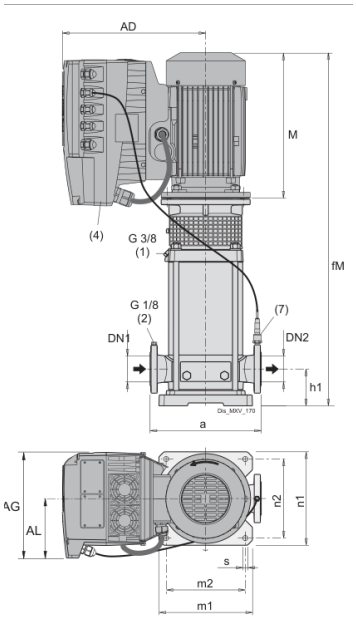

M	459	fM	1077
P	350	AD	393
AG	281	AL	153
a	320	h1	105
f	618	g1	35
n1	260	n2	220
m1	260	m2	220
m4	495	s	14

MXV | 50 Hz | Ed. 02/2025 | 202 / 219